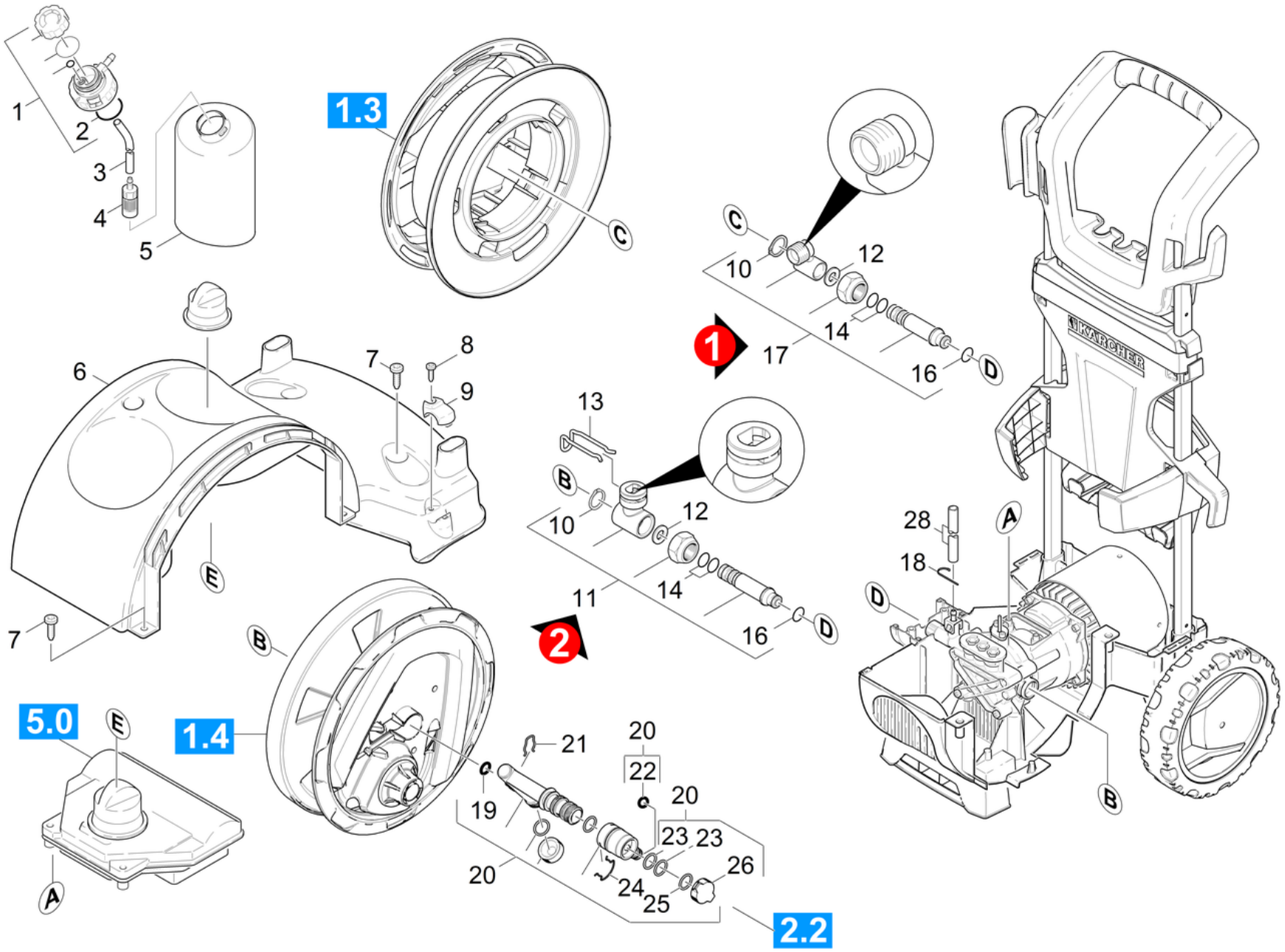
1
2
3
4
5
1.3
C
6
7
8
9
E
7
B
5.0
E
1.4
A
C
10
12
14
17
16
D
1
13
B
10
12
11
14
16
D
2
28
18
A
D
B
21
20
22
20
19
23
23
20
24
25
26
2.2

| POS | Article no. | Description | Quantity | Unit | Remark | Foot note text |
|---|---|---|---|---|---|---|
| 1 | 4.063-807.0 | Cover tank cleaning agents | 1 | PC | | |
| 2 | 6.362-740.0 | O-Ring seal 34,60X 2,62 | 1 | PC | | |
| 3 | 6.388-216.0 | Hose DN 5 | 1 | m | | TO ORDER AS CUT GOODS |
| 4 | 5.731-652.0 | Filter with weight | 1 | PC | | |
| 5 | 5.071-115.0 | Tank cleaning agents | 1 | PC | | |
| 6 | 5.033-318.0 | Chassis top part neutrally | 1 | PC | | |
| 7 | 7.303-112.0 | Screw 6x20 -10.9-R2R (In6Rd) | 6 | PC | | |
| 8 | 7.303-129.0 | Screw 4x16 -10.9-R2R (K-In6Rd) | 1 | PC | | |
| 9 | 5.394-521.0 | Covering cap E-KABEL | 1 | PC | | |
| 10 | 7.343-306.0 | Lock washer 12-St-A2E DIN 6799 | 1 | PC | | |
| 11 | 4.401-094.0 | Rotary bushing complete for replacement | 1 | PC | VERSION 2 | |
| 12 | 7.343-052.0 | Shim ring 16x22x1-St2K50 DIN 988 | 1 | PC | | |
| 13 | 5.059-402.0 | Clamp 90° | 1 | PC | | |
| 14 | 6.363-628.0 | O-Ring seal complete | 2 | PC | | |
| 16 | 6.362-151.0 | O-Ring d. 10 x 2 NBR 70 | 1 | PC | | |
| 17 | 4.401-080.0 | Rotary bushing | 1 | PC | VERSION 1 | |
| 18 | 6.641-463.0 | Cable tape | 1 | PC | | |
| 19 | 6.363-610.0 | O-Ring seal 13 x 3 -NBR | 1 | PC | | |
| 20 | 4.033-027.0 | Connection low-pressure complete | 1 | PC | | |
| 21 | 5.048-915.0 | Clamp | 1 | PC | | |
| 22 | 6.362-119.0 | O-Ring seal 10,0 X 3,0 -NBR 70 | 1 | PC | | |
| 23 | 6.363-448.0 | O-Ring seal 20,2 x 3,0 Viton 75 | 2 | PC | | |
| 24 | 7.777-999.0 | Stockpiling discontinued | 1 | PC | | |
| 25 | 6.362-579.0 | O-Ring seal 17,5 X 3,5 | 2 | PC | | |
| 26 | 5.321-866.0 | Cover with snap-fit G3/4" | 1 | PC | | |
| 28 | 6.390-426.0 | Hose DN 5 | 1 | m | | TO ORDER AS CUT GOODS |